Garage/Shop Heater EKB Series

Model Code:

EKB	24	40	TB
A	B	C	D

A: Series
B: 12 - 120V, 20 - 208V
24 - 240V
C: Watts (5000)
D: TB- Thermostat & Bracket

c UL us LISTED

SMART SLP LIMIT PROTECTION

- Quick heat element
- Long life unit bearing motor
- Patented Smart Limit® protection
- Aluminum fan blade
- Built-in thermostat
- Universal mounting bracket
- Standard color: black textured finish
- Safety sensor on each element
- 1-year limited warranty

MADE IN USA

The EKB Garage/Shop Heater

The EKB is designed to be an affordable, high-capacity garage / shop heater. Combining King's patented Smart Limit safety technology with dual NiChrome coil elements for rapid heat transfer, the EKB is ideal for many residential applications. The flow-through design efficiently moves air by pulling air from the back and sides of the heater and discharges it out the front, easily heating a large space. The built-in thermostat has a temperature range from 40 to 85 degrees. The universal mounting bracket can be wall or ceiling mounted at a minimum of 6 feet above the floor. Good air distribution and comfort is achieved by swiveling the bracket to specific work areas.

Ordering Information

	MODEL	UPC	VOLTS	WATTS	AMPS	WIRE	BREAKER SIZE	TEMP RISE	HEATING SQ FT
120V	EKB1230TB	16506	120	2850	24	10-2 w/ground	30 Amp 1 pole	40	500
	EKB1220TB	16507	120	1920	16	12-2 w/ground	20 Amp 1 pole	40	300
208V	EKB2050TB	16501	208	5000	24	10-2 w/ground	30 Amp 2 pole	80	750
	EKB2040TB	16503	208	3750	18	10-2 w/ground	30 Amp 2 pole	70	600
	EKB2030TB	16505	208	2850	14	12-2 w/ground	20 Amp 2 pole	50	500
240V	EKB2450TB	16500	240	5000	20	10-2 w/ground	30 Amp 2 pole	80	750
	EKB2440TB	16502	240	3850	16	12-2 w/ground	20 Amp 2 pole	70	600
	EKB2430TB	16504	240	2850	12	14-2 w/ground	15 Amp 2 pole	50	500

Engineering Specifications

Heating Elements: Rigid Muscovite Mica construction with 80-20 NiChrome heating wire provides quick heating without cold air start ups, heat is wiped from elements as fans slows to a stop. Manual reset Safety sensor on each element.
Thermostat: Factory installed single pole operation range 40 to 85 degrees F.
Unit Bearing Motor: Permanently lubricated, cast aluminum unit bearing, 6-watt output 4 pole motor, 1550 rpm, 20 cc oil supply.
Mounting Bracket: 18 ga steel, multiple mounting options - ceiling/wall.
CFM: 270 Maximum

Thermal Overload: Heaters shall be equipped with King's patented thermal overload Smart Limit Protection®, which disconnects elements and motor in the event normal operating temperatures are exceeded. If thermal overload trips due to abnormal operating temperatures, thermal overload shall remain open until manually reset by turning the heater off for 15 minutes. U.S. PATENT #6,748,163 B2 • CIPO PATENT #2,393,882
Case: 22 ga steel, inlet and outlet perforation, special side and top safety air inlets.
Exterior: Durable textured finish.
Approval: cULus (E41422)

Garage/Shop Heater EKB Series

Dimensional Data

EKB Unit Heater

Heater case size
w/o bracket
Height:13 5/8 in. / 34.6 cm
Width: 10 3/8 in./ 26.35 cm
Depth: 9 3/9 in. / 24.76 cm

Maximum Outside Dims
W/bracket and stat
Height:18 3/4 in / 47.62 cm
Width: 11 3/8 in. / 28.90 cm
Depth: 10 5/8 in./26.98 cm

Bracket Information

Hole Sizes
* 1/2 in. /1.27 cm 3 holes
+ 1/4 in. /.63 cm 4 holes

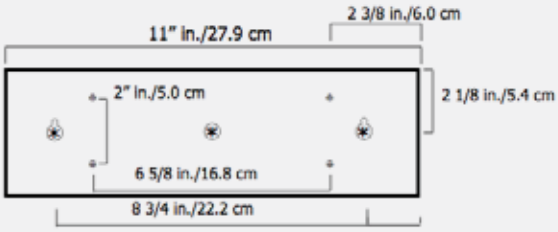

Fig 2.2

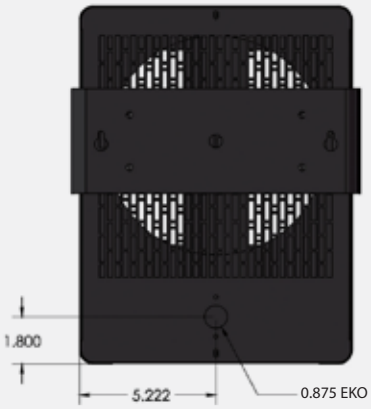

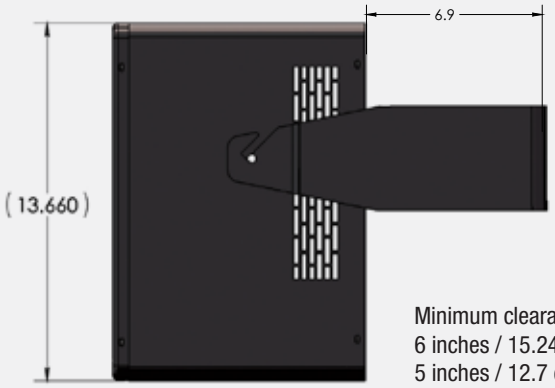

Minimum clearances from walls and ceiling
6 inches / 15.24 cm to the side
5 inches / 12.7 cm from the back
2 inches / 5.08 cm from ceiling
Never point heater at ceiling
Maintain clearance of at least 3 ft. in front of heat outlet

MINIMUM CLEARANCE

From combustibles: 18" from front, 2" from top, 6" from sides and 5" from rear.