SAVE THESE INSTRUCTIONS

INSTALLATION AND MAINTENANCE

king

CWR IceFree™ Controller

For use with constant wattage de-icing heating cable

DANGER

ELECTRIC SHOCK OR FIRE HAZARD

READ ALL WIRE SIZING, VOLTAGE REQUIREMENTS AND SAFETY DATA TO AVOID PROPERTY DAMAGE AND PERSONAL INJURY

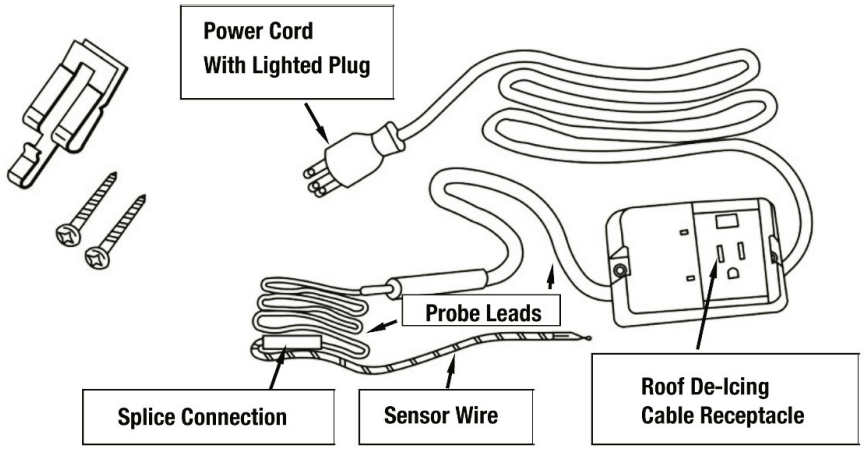

GENERAL INFORMATION

This product has been designed and manufactured for the sole intended use of controlling roof de-icing cables. Roof de-icing cable is designed to help prevent ice dams from forming on inclined roofs, in gutters and downspouts. Improper installation, use, operation and/or maintenance of electrical roof de-icing cable can cause fire, electrical shock and/or allow ice dams to form.

WARNING

- If after carefully reading these instructions you still have questions regarding installation or operation of this product, call King Electrical Manufacturing Co. at 206-762-0400 or visit us at www.king-electric.com for assistance.
- It is recommended that the circuit supplying the unit and heating cable have ground fault protection; this is mandatory by electrical code for some applications in many regions. Consult an electrical inspector to determine the specific ground fault requirements for your application prior to installation. If you are unsure that your circuit has ground fault protection, consult an electrician. If a ground fault device trips and cannot be reset, then a fault in the unit or in the roof de-icing cable exists. Do not attempt to by pass the ground fault device. Bypassing the ground fault device may result in the risk of fire or electrical shock.
- The unit must be kept dry; the unit is not water resistant and will fail if directly exposed to the weather.
- All roof de-icing cables must be installed in compliance with the latest editions of the National Electric Code; Canadian Electrical Code; State or Provincial Codes; and Local Codes.
- These instructions must be saved and made available to owners or users of this product and/or transferred to future owners.
- Any roof de-icing cable that is to be connected to the unit must be installed according to manufacturer's instructions.
- Do not connect more than one roof cable to the unit. The maximum cable size that can be connected to the unit is 1200 Watts. Risk of fire, electrical shock or the formation of ice dams can result from a lager cable or from multiple cables being connected.

INSTALLATION INSTRUCTIONS

1. Mount the unit and the splice block under the soffit, or equivalent location protected from the weather, using the screws provided. Refer to Figure 2. Ensure that the mounting location is close enough to the receptacle supplying power to the unit to allow the cord on the control to be plugged in. The connection should be located for the best protection from the weather and a drip loop used as appropriate for maximum protection. If desired, this receptacle can be controlled by a switch (with a pilot light) located inside the house. See **Fig. 2.**
2. Lay the Splice Connection and sensor wire along the bottom of the gutter within two inches of the roof de-icing cable. Route the sensor wire over at least one gutter support strap or nail in order to sense the full depth of the gutter, then route along on triangular weave of the heating cable on the roof as per diagram. At the peak of the second triangle, attach the sensor wire up the roof, at least 2 feet (60.96 cm) past the heater wire as illustrated. Use the clips provided to secure the sensor wire to the roof. Gently squeeze the coated end of the clip around the sensor wire. See **Fig. 3.**
3. Connect the cord from the roof cable to the Roof Sentry Control box. Cables up to maximum of 1200 Watts can be used.
4. Plug the Roof Sentry cord-set into the receptacle. Ensure that this connection remains dry.
5. If using a pilot light, turn the pilot light switch to the “ON” position. The pilot light on the plug of the unit will be lit.
6. Your Roof Sentry is now ready to control the cable on your roof.
7. The power light indicator (next to the receptacle on the control box) will only be lit, when the roof de-icing cable is energized. See **Fig. 4.**
8. For Roof without gutter—lay the sensor wire along the triangular weave of the heating cable as shown on Fig. 5 and secure the splice block under the eave of the roof as shown on **Fig. 5.**
9. The unit may be used on metal and membrane roofs. Typically installation of the roof clips on these types of roofs requires and adhesive be used to bond the clip to metal or membrane material. The choice of adhesive is left to the installer. Care must be taken on metal roof installations to ensure the sensor wire is protected from sliding snow or ice, which could damage the sensor wire and render the unit inoperable. Prior to installing on a membrane roof ensure the sensor wire will be able to reach the area where melting is occurring, The unit sensor wire cannot be extended.

Fig. 2

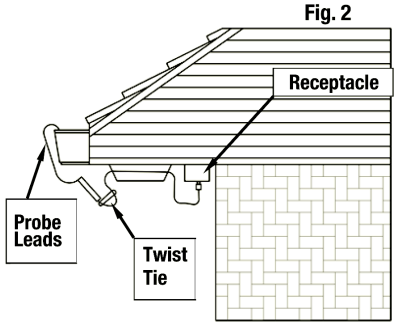

Fig. 3

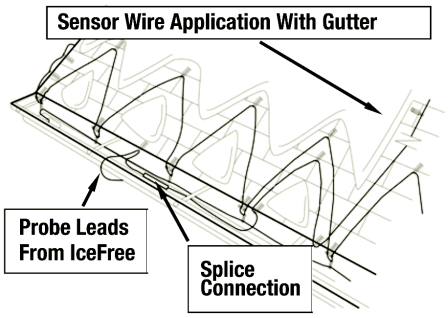

Fig. 4

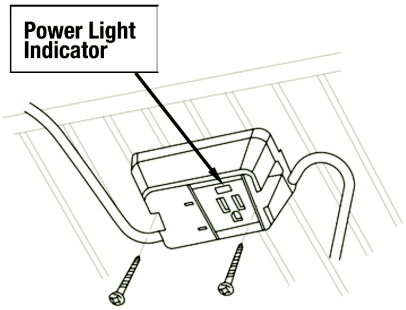

Fig. 5

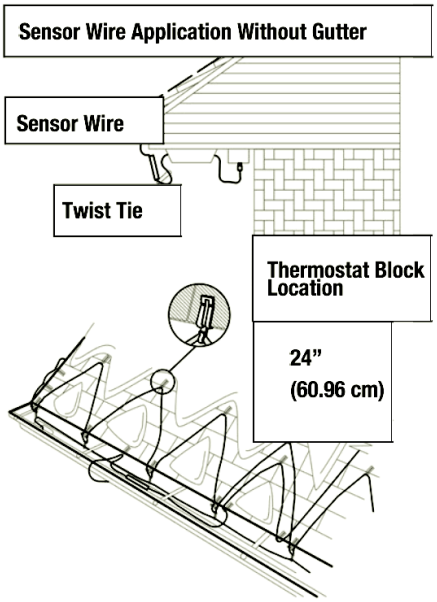

OPERATION INSTRUCTIONS

The roof control is designed to energize the roof de-icing cables ONLY when roof snow/ice melting conditions exist AND there is a risk of this melt water refreezing at the roof edge to form an ice dam. This ensures that ice dams will not form and that energy consumption is minimized.

The thermostat (in the controller box) senses the ambient temperature. The sensor wire senses the presence of water. If the temperature is below about 40°F (4°C) AND at least 10 inches (25.40cm) of the sensor is laying in (or on) water, then the unit will apply power to the roof cable. Note that snow or ice surrounding the sensor wire WILL NOT result in activation of the unit to energize the cables.

The unit can be tested for functionality by submerging the thermostat block and 10 inches (25.40cm) of sensor wire in ice water for 10 minutes; the power indicator light will turn on. Disconnect the power to the unit during summer months. At the beginning of the heating season and monthly during operation, inspect the control unit and its connection to the electric power source. Discontinue use and remove any unit that has been cut, damaged, or has deteriorated for any reason. Other conditions to look for are chewing by animals or any physical abuse. This unit does not contain any serviceable parts. Inspect for and remove all leaves and combustible debris from roof, gutters and downspouts.

LIMITED WARRANTY AND LIABILITY

The manufacturer warrants that if there are any defects in material or workmanship in this product during the first twelve (12) months after the date of its purchase, we will replace the product with an equivalent model, not including any labor or other installation costs. Our obligation to replace the product as described above is conditioned upon:

(a) the installation of the product conforms to the specifications set forth in our installation instructions and (b) the product not having been damaged by unrelated mechanical or electrical activities.

Product replacement as described above shall be your sole and exclusive remedy for a breach of this warranty. This limited warranty does not cover any service costs relating to repair or replacement.

We shall not be liable for any incidental, special or consequential damages as a result of any breach of this warranty or otherwise, whether or not caused by negligence. Some states do not allow the exclusion or limitation of incidental or consequential damages, so the above limitation or exclusion may not apply to you.

The warranty above is exclusive and makes no other warranties with respect to description or quality of the product. No affirmation of fact or promise made by us, by words or action, shall constitute a warranty. If any model or sample was shown to you, the model or sample was used merely to illustrate the general type and quality of the goods and not to represent that the goods would necessarily be of that type or nature.

No agent, employee or representative of ours has authority to bind us to any affirmation, representation or warranty concerning the goods sold unless such affirmation, representation or warranty is specifically incorporated by written agreement. ANY IMPLIED WARRANTY OF MERCHANTABILITY OR FITNESS FOR PARTICULAR PURPOSE THAT MAY ARIES IN CONNECTION WITH THE SALE OF THIS PRODUCT SHALL BE LIMITED IN DURATION TO TWELVE (12) MONTHS FROM THE DATE OF PURCHASE. WE DISCLAIM ALL OTHER IMPLIED WARRANTIES, UNLESS WE ARE PROHIBITED BY LAW FROM DOING SO, IN WHICH CASE ALL SUCH IMPLIED WARRANTIES SHALL EXPIRE AT THE EARLIEST TIME PERMITTED BY APPLICABLE LAW.

Some states do not allow limitations on how long an implied warranty lasts, so the above limitation may not apply to you. This warranty gives you specific legal rights, and you may also have other rights which vary from state to state or province to province.

To obtain a replacement under warranty any inoperative product or component must be returned, with proof of purchase, to King Electric at the addresses noted herein. Buyer is responsible for all costs incurred in removal and re-installation of product and must pre-pay shipment to factory or point of purchase.

King Electrical Mfg. Co. can accept no responsibility for possible errors in catalogues, brochures, other printed materials, and website information. King Electrical Mfg. Co. reserves the right to alter its products without notice. This also applies to products already on order provided that such alteration can be made without subsequent changes being necessary in specifications already upon. All trademarks in this material are property of the respective companies.